PRODUCT SPECSHEET

PRODUCT: **TSi VRP**
CATEGORY: **STATIC VOLTAGE STABILIZER**
MODEL: **THREE PHASE 6KVA TO 450KVA, ±13%**

TSi Power Pvt Ltd, 154-55, Siddhi Industrial Infra Park, Waghodia,
Vadodara-391760, Gujarat, India | +91-8000455999 | info@tsipower.in

DISCLAIMER: The information provided is for representative purposes only and does not constitute a warranty. Users are responsible for verifying the suitability of the product for their specific applications.

Index *(click to directly jump to a section)*

- ABOUT THE PRODUCT
- FEATURES & BENEFITS
- ABOUT THE COMPANY

- TECHNICAL SPECIFICATIONS - VRP-6000-9339-130M
- TECHNICAL SPECIFICATIONS - VRP-10000-9339-130M
- TECHNICAL SPECIFICATIONS - VRP-15000-9339-130M
- TECHNICAL SPECIFICATIONS - VRP-20000-9339-130M
- TECHNICAL SPECIFICATIONS - VRP-25000-9339-130M
- TECHNICAL SPECIFICATIONS - VRP-30000-9339-130M
- TECHNICAL SPECIFICATIONS - VRP-40000-9339-130M
- TECHNICAL SPECIFICATIONS - VRP-50000-9339-130M
- TECHNICAL SPECIFICATIONS - VRP-60000-9339-130M
- TECHNICAL SPECIFICATIONS - VRP-75000-9339-130M
- TECHNICAL SPECIFICATIONS - VRP-110000-9339-130M
- TECHNICAL SPECIFICATIONS - VRP-110000-9339-130MP
- TECHNICAL SPECIFICATIONS - VRP-130000-9339-130M
- TECHNICAL SPECIFICATIONS - VRP-130000-9339-130MP
- TECHNICAL SPECIFICATIONS - VRP-160000-9339-130M
- TECHNICAL SPECIFICATIONS - VRP-160000-9339-130MP
- TECHNICAL SPECIFICATIONS - VRP-200000-9339-130MP
- TECHNICAL SPECIFICATIONS - VRP-250000-9339-130MP
- TECHNICAL SPECIFICATIONS - VRP-300000-9339-130MP
- TECHNICAL SPECIFICATIONS - VRP-400000-9339-130MP
- TECHNICAL SPECIFICATIONS - VRP-416000-9339-130MP
- TECHNICAL SPECIFICATIONS - VRP-450000-9339-130MP

- DIMENSION DIAGRAMS
- CONTACT US

- The **TSi VRP series** is designed to provide precision power with a typical response cum correction time of 20 milliseconds to comply with the requirements of the ITIC curve for power supply to electronics.

TSi VRP has revolutionised the industry, as the existing technologies become either obsolete or extremely expensive. Hence, we don't call them our competitors.

They are simply 'wrong solutions' for the existing power problems.

How does the TSi VRP work?

The high frequency Insulated Gate Bipolar Transistor (IGBT) driven converter takes the incoming AC power, measures it against the nominal voltage reference and adds or subtracts voltage to achieve a precisely regulated 230V output. The automatic bypass will be activated when there is a fault condition.

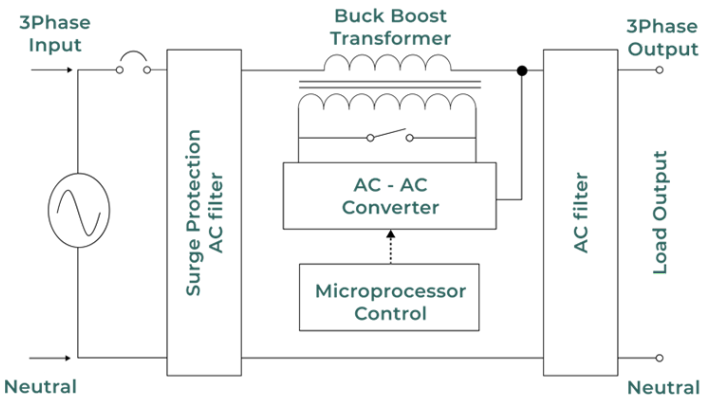

Green LEDs are used to indicate Normal (regulating mode) operation.

jump to index

Features & Benefits -

- ➔ Static technology results in quiet operation, high product up-time & low maintenance.
- ➔ Provides optimum voltage compensation, sag control, swell control, spike & noise control.
- ➔ Provides output voltage to within +/- 1% for superior regulation.
- ➔ Internal surge voltage protection assures trouble-free operation.
- ➔ AC input circuit breakers and load over current protection prevents costly equipment damage.
- ➔ Tight control over electronic card failures, data corruption and machine breakdowns result in higher productivity, lower operating costs, and greater consumer comfort.
- ➔ Lightweight and compact size makes for ease of installation.
- ➔ Three phase as well as single phase versions are available

jump to index

The TSi Philosophy - Powering Happiness

TSi Power is a renowned and a trusted name in the power conditioning industry. Since 2011, we have built a workplace that *nurtures* happy employees to *create* great products, in turn, making *happy customers*. Our founders strongly believe and have cultivated this within the company. There's a reason why we have become one of the *world's most trusted* power conditioners.

Powering Happiness is both our business goal and our work culture.

Our Facility in Vadodara, India

jump to index

TECHNICAL SPECIFICATIONS - VRP-6000-9339-130M

jump to index

ELECTRICAL	
Capacity (in KVA)	6
Switching Technology	20 kHz IGBT AC chopper/inverter
Voltage Compensation Time	20 ms typical
AC INPUT	
Nominal Input Voltage (V)	Three phase 415
Designed Input Voltage Range (V) (voltage regulation accuracy of +/-1%)	360 - 470
Input Voltage Range (V) (for relaxed output regulation within functional range of 200-250V P-N)	300 - 490
Nominal Operating Frequency	47 – 63 Hz
AC Input Connector	L1, L2, L3, Neutral & Ground input wires
Overload & Short Circuit Protection	Through suitably rated input circuit breaker
AC OUTPUT	
Nominal Output Voltage (V)	Three phase 415
Efficiency	Typical 97% (under 20 – 100 % load condition)
Output Voltage Compensation Range	+/- 1 %
Maximum Rated Output Current (A)	8
System Status Indicator	Green LED ON-Normal operation | Amber LED ON-Bypass operation | Red LED ON-Fault
Output Connector	L1, L2, L3, Neutral & Ground output wires
Surge Protection	Class II Surge Protection
PHYSICAL	
Cabinet Construction	RAL 7035 light grey powder coated CRCA cabinets
Automatic AC-AC Converter Bypass	Standard, will get activated when there is a fault condition
Cabinet Weather Protection Ratings	IP 20 (for use in protected indoor environments)
Display	Digital output voltage display
Mounting	4 High Quality Castor wheels | 2 with brakes
Overall Dimension (approx.)	As per Dimension Diagram of Cubical Type 610x610x640
Unpacked Weight (approx.)	55 kg
ENVIRONMENTAL	
Cooling Method	Forced air
Operating Temperature Range	0 to + 45 °C
Operating Humidity Range	10 to 90% relative humidity (non-condensing)
Note: 1. The voltage regulation is based on 415V nominal output voltage. This would proportionately change in case nominal output voltage is required to be preset at any other value between 380V-415V. 2. All standard models are optionally available in IP54.	

TECHNICAL SPECIFICATIONS - VRP-10000-9339-130M

jump to index

ELECTRICAL	
Capacity (in KVA)	10
Switching Technology	20 kHz IGBT AC chopper/inverter
Voltage Compensation Time	20 ms typical
AC INPUT	
Nominal Input Voltage (V)	Three phase 415
Designed Input Voltage Range (V) (voltage regulation accuracy of +/-1%)	360 - 470
Input Voltage Range (V) (for relaxed output regulation within functional range of 200-250V P-N)	300 - 490
Nominal Operating Frequency	47 – 63 Hz
AC Input Connector	L1, L2, L3, Neutral & Ground input wires
Overload & Short Circuit Protection	Through suitably rated input circuit breaker
AC OUTPUT	
Nominal Output Voltage (V)	Three phase 415
Efficiency	Typical 97% (under 20 – 100 % load condition)
Output Voltage Compensation Range	+/- 1 %
Maximum Rated Output Current (A)	14
System Status Indicator	Green LED ON-Normal operation | Amber LED ON-Bypass operation | Red LED ON-Fault
Output Connector	L1, L2, L3, Neutral & Ground output wires
Surge Protection	Class II Surge Protection
PHYSICAL	
Cabinet Construction	RAL 7035 light grey powder coated CRCA cabinets
Automatic AC-AC Converter Bypass	Standard, will get activated when there is a fault condition
Cabinet Weather Protection Ratings	IP 20 (for use in protected indoor environments)
Display	Digital output voltage display
Mounting	4 High Quality Castor wheels | 2 with brakes
Overall Dimension (approx.)	As per Dimension Diagram of Cubical Type 610x610x640
Unpacked Weight (approx.)	65 kg
ENVIRONMENTAL	
Cooling Method	Forced air
Operating Temperature Range	0 to + 45 °C
Operating Humidity Range	10 to 90% relative humidity (non-condensing)
Note: 1. The voltage regulation is based on 415V nominal output voltage. This would proportionately change in case nominal output voltage is required to be preset at any other value between 380V-415V. 2. All standard models are optionally available in IP54.	

TECHNICAL SPECIFICATIONS - VRP-15000-9339-130M

jump to index

ELECTRICAL	
Capacity (in KVA)	15
Switching Technology	20 kHz IGBT AC chopper/inverter
Voltage Compensation Time	20 ms typical
AC INPUT	
Nominal Input Voltage (V)	Three phase 415
Designed Input Voltage Range (V) (voltage regulation accuracy of +/-1%)	360 - 470
Input Voltage Range (V) (for relaxed output regulation within functional range of 200-250V P-N)	300 - 490
Nominal Operating Frequency	47 – 63 Hz
AC Input Connector	L1, L2, L3, Neutral & Ground input wires
Overload & Short Circuit Protection	Through suitably rated input circuit breaker
AC OUTPUT	
Nominal Output Voltage (V)	Three phase 415
Efficiency	Typical 97% (under 20 – 100 % load condition)
Output Voltage Compensation Range	+/- 1 %
Maximum Rated Output Current (A)	21
System Status Indicator	Green LED ON-Normal operation | Amber LED ON-Bypass operation | Red LED ON-Fault
Output Connector	L1, L2, L3, Neutral & Ground output wires
Surge Protection	Class II Surge Protection
PHYSICAL	
Cabinet Construction	RAL 7035 light grey powder coated CRCA cabinets
Automatic AC-AC Converter Bypass	Standard, will get activated when there is a fault condition
Cabinet Weather Protection Ratings	IP 20 (for use in protected indoor environments)
Display	Digital output voltage display
Mounting	4 High Quality Castor wheels | 2 with brakes
Overall Dimension (approx.)	As per Dimension Diagram of Cubical Type 610x610x640
Unpacked Weight (approx.)	70 kg
ENVIRONMENTAL	
Cooling Method	Forced air
Operating Temperature Range	0 to + 45 °C
Operating Humidity Range	10 to 90% relative humidity (non-condensing)
Note: 1. The voltage regulation is based on 415V nominal output voltage. This would proportionately change in case nominal output voltage is required to be preset at any other value between 380V-415V. 2. All standard models are optionally available in IP54.	

TECHNICAL SPECIFICATIONS - VRP-20000-9339-130M

jump to index

ELECTRICAL	
Capacity (in KVA)	20
Switching Technology	20 kHz IGBT AC chopper/inverter
Voltage Compensation Time	20 ms typical
AC INPUT	
Nominal Input Voltage (V)	Three phase 415
Designed Input Voltage Range (V) (voltage regulation accuracy of +/-1%)	360 - 470
Input Voltage Range (V) (for relaxed output regulation within functional range of 200-250V P-N)	300 - 490
Nominal Operating Frequency	47 – 63 Hz
AC Input Connector	L1, L2, L3, Neutral & Ground input wires
Overload & Short Circuit Protection	Through suitably rated input circuit breaker
AC OUTPUT	
Nominal Output Voltage (V)	Three phase 415
Efficiency	Typical 97% (under 20 – 100 % load condition)
Output Voltage Compensation Range	+/- 1 %
Maximum Rated Output Current (A)	28
System Status Indicator	Green LED ON-Normal operation | Amber LED ON-Bypass operation | Red LED ON-Fault
Output Connector	L1, L2, L3, Neutral & Ground output wires
Surge Protection	Class II Surge Protection
PHYSICAL	
Cabinet Construction	RAL 7035 light grey powder coated CRCA cabinets
Automatic AC-AC Converter Bypass	Standard, will get activated when there is a fault condition
Cabinet Weather Protection Ratings	IP 20 (for use in protected indoor environments)
Display	Digital output voltage display
Mounting	4 High Quality Castor wheels | 2 with brakes
Overall Dimension (approx.)	As per Dimension Diagram of Cubical Type 610x610x640
Unpacked Weight (approx.)	90 kg
ENVIRONMENTAL	
Cooling Method	Forced air
Operating Temperature Range	0 to + 45 °C
Operating Humidity Range	10 to 90% relative humidity (non-condensing)
Note: 1. The voltage regulation is based on 415V nominal output voltage. This would proportionately change in case nominal output voltage is required to be preset at any other value between 380V-415V. 2. All standard models are optionally available in IP54.	

TECHNICAL SPECIFICATIONS - VRP-25000-9339-130M

jump to index

ELECTRICAL	
Capacity (in KVA)	25
Switching Technology	20 kHz IGBT AC chopper/inverter
Voltage Compensation Time	20 ms typical
AC INPUT	
Nominal Input Voltage (V)	Three phase 415
Designed Input Voltage Range (V) (voltage regulation accuracy of +/-1%)	360 - 470
Input Voltage Range (V) (for relaxed output regulation within functional range of 200-250V P-N)	300 - 490
Nominal Operating Frequency	47 – 63 Hz
AC Input Connector	L1, L2, L3, Neutral & Ground input wires
Overload & Short Circuit Protection	Through suitably rated input circuit breaker
AC OUTPUT	
Nominal Output Voltage (V)	Three phase 415
Efficiency	Typical 97% (under 20 – 100 % load condition)
Output Voltage Compensation Range	+/- 1 %
Maximum Rated Output Current (A)	35
System Status Indicator	Green LED ON-Normal operation | Amber LED ON-Bypass operation | Red LED ON-Fault
Output Connector	L1, L2, L3, Neutral & Ground output wires
Surge Protection	Class II Surge Protection
PHYSICAL	
Cabinet Construction	RAL 7035 light grey powder coated CRCA cabinets
Automatic AC-AC Converter Bypass	Standard, will get activated when there is a fault condition
Cabinet Weather Protection Ratings	IP 20 (for use in protected indoor environments)
Display	Digital output voltage display
Mounting	4 High Quality Castor wheels | 2 with brakes
Overall Dimension (approx.)	As per Dimension Diagram of Cubical Type 610x610x640
Unpacked Weight (approx.)	95 kg
ENVIRONMENTAL	
Cooling Method	Forced air
Operating Temperature Range	0 to + 45 °C
Operating Humidity Range	10 to 90% relative humidity (non-condensing)
Note: 1. The voltage regulation is based on 415V nominal output voltage. This would proportionately change in case nominal output voltage is required to be preset at any other value between 380V-415V. 2. All standard models are optionally available in IP54.	

TECHNICAL SPECIFICATIONS - VRP-30000-9339-130M

jump to index

ELECTRICAL	
Capacity (in KVA)	30
Switching Technology	20 kHz IGBT AC chopper/inverter
Voltage Compensation Time	20 ms typical
AC INPUT	
Nominal Input Voltage (V)	Three phase 415
Designed Input Voltage Range (V) (voltage regulation accuracy of +/-1%)	360 - 470
Input Voltage Range (V) (for relaxed output regulation within functional range of 200-250V P-N)	300 - 490
Nominal Operating Frequency	47 – 63 Hz
AC Input Connector	L1, L2, L3, Neutral & Ground input wires
Overload & Short Circuit Protection	Through suitably rated input circuit breaker
AC OUTPUT	
Nominal Output Voltage (V)	Three phase 415
Efficiency	Typical 97% (under 20 – 100 % load condition)
Output Voltage Compensation Range	+/- 1 %
Maximum Rated Output Current (A)	42
System Status Indicator	Green LED ON-Normal operation | Amber LED ON-Bypass operation | Red LED ON-Fault
Output Connector	L1, L2, L3, Neutral & Ground output wires
Surge Protection	Class II Surge Protection
PHYSICAL	
Cabinet Construction	RAL 7035 light grey powder coated CRCA cabinets
Automatic AC-AC Converter Bypass	Standard, will get activated when there is a fault condition
Cabinet Weather Protection Ratings	IP 20 (for use in protected indoor environments)
Display	Digital output voltage display
Mounting	4 High Quality Castor wheels | 2 with brakes
Overall Dimension (approx.)	As per Dimension Diagram of Cubical Type 610x610x640
Unpacked Weight (approx.)	100 kg
ENVIRONMENTAL	
Cooling Method	Forced air
Operating Temperature Range	0 to + 45 °C
Operating Humidity Range	10 to 90% relative humidity (non-condensing)
Note: 1. The voltage regulation is based on 415V nominal output voltage. This would proportionately change in case nominal output voltage is required to be preset at any other value between 380V-415V. 2. All standard models are optionally available in IP54.	

TECHNICAL SPECIFICATIONS - VRP-40000-9339-130M

jump to index

ELECTRICAL	
Capacity (in KVA)	40
Switching Technology	20 kHz IGBT AC chopper/inverter
Voltage Compensation Time	20 ms typical
AC INPUT	
Nominal Input Voltage (V)	Three phase 415
Designed Input Voltage Range (V) (voltage regulation accuracy of +/-1%)	360 - 470
Input Voltage Range (V) (for relaxed output regulation within functional range of 200-250V P-N)	300 - 490
Nominal Operating Frequency	47 – 63 Hz
AC Input Connector	L1, L2, L3, Neutral & Ground input wires
Overload & Short Circuit Protection	Through suitably rated input circuit breaker
AC OUTPUT	
Nominal Output Voltage (V)	Three phase 415
Efficiency	Typical 97% (under 20 – 100 % load condition)
Output Voltage Compensation Range	+/- 1 %
Maximum Rated Output Current (A)	56
System Status Indicator	Green LED ON-Normal operation | Amber LED ON-Bypass operation | Red LED ON-Fault
Output Connector	L1, L2, L3, Neutral & Ground output wires
Surge Protection	Class II Surge Protection
PHYSICAL	
Cabinet Construction	RAL 7035 light grey powder coated CRCA cabinets
Automatic AC-AC Converter Bypass	Standard, will get activated when there is a fault condition
Cabinet Weather Protection Ratings	IP 20 (for use in protected indoor environments)
Display	Digital output voltage display
Mounting	4 High Quality Castor wheels | 2 with brakes
Overall Dimension (approx.)	As per Dimension Diagram of Cubical Type 660x660x720
Unpacked Weight (approx.)	150 kg
ENVIRONMENTAL	
Cooling Method	Forced air
Operating Temperature Range	0 to + 45 °C
Operating Humidity Range	10 to 90% relative humidity (non-condensing)
Note: 1. The voltage regulation is based on 415V nominal output voltage. This would proportionately change in case nominal output voltage is required to be preset at any other value between 380V-415V. 2. All standard models are optionally available in IP54.	

TECHNICAL SPECIFICATIONS - VRP-50000-9339-130M

jump to index

ELECTRICAL	
Capacity (in KVA)	50
Switching Technology	20 kHz IGBT AC chopper/inverter
Voltage Compensation Time	20 ms typical
AC INPUT	
Nominal Input Voltage (V)	Three phase 415
Designed Input Voltage Range (V) (voltage regulation accuracy of +/-1%)	360 - 470
Input Voltage Range (V) (for relaxed output regulation within functional range of 200-250V P-N)	300 - 490
Nominal Operating Frequency	47 – 63 Hz
AC Input Connector	L1, L2, L3, Neutral & Ground input wires
Overload & Short Circuit Protection	Through suitably rated input circuit breaker
AC OUTPUT	
Nominal Output Voltage (V)	Three phase 415
Efficiency	Typical 97% (under 20 – 100 % load condition)
Output Voltage Compensation Range	+/- 1 %
Maximum Rated Output Current (A)	70
System Status Indicator	Green LED ON-Normal operation | Amber LED ON-Bypass operation | Red LED ON-Fault
Output Connector	L1, L2, L3, Neutral & Ground output wires
Surge Protection	Class II Surge Protection
PHYSICAL	
Cabinet Construction	RAL 7035 light grey powder coated CRCA cabinets
Automatic AC-AC Converter Bypass	Standard, will get activated when there is a fault condition
Cabinet Weather Protection Ratings	IP 20 (for use in protected indoor environments)
Display	Digital output voltage display
Mounting	4 High Quality Castor wheels | 2 with brakes
Overall Dimension (approx.)	As per Dimension Diagram of Cubical Type 660x660x720
Unpacked Weight (approx.)	150 kg
ENVIRONMENTAL	
Cooling Method	Forced air
Operating Temperature Range	0 to + 45 °C
Operating Humidity Range	10 to 90% relative humidity (non-condensing)
Note: 1. The voltage regulation is based on 415V nominal output voltage. This would proportionately change in case nominal output voltage is required to be preset at any other value between 380V-415V. 2. All standard models are optionally available in IP54.	

TECHNICAL SPECIFICATIONS - VRP-60000-9339-130M

jump to index

ELECTRICAL	
Capacity (in KVA)	60
Switching Technology	20 kHz IGBT AC chopper/inverter
Voltage Compensation Time	20 ms typical
AC INPUT	
Nominal Input Voltage (V)	Three phase 415
Designed Input Voltage Range (V) (voltage regulation accuracy of +/-1%)	360 - 470
Input Voltage Range (V) (for relaxed output regulation within functional range of 200-250V P-N)	300 - 490
Nominal Operating Frequency	47 – 63 Hz
AC Input Connector	L1, L2, L3, Neutral & Ground input wires
Overload & Short Circuit Protection	Through suitably rated input circuit breaker
AC OUTPUT	
Nominal Output Voltage (V)	Three phase 415
Efficiency	Typical 97% (under 20 – 100 % load condition)
Output Voltage Compensation Range	+/- 1 %
Maximum Rated Output Current (A)	84
System Status Indicator	Green LED ON-Normal operation | Amber LED ON-Bypass operation | Red LED ON-Fault
Output Connector	L1, L2, L3, Neutral & Ground output wires
Surge Protection	Class II Surge Protection
PHYSICAL	
Cabinet Construction	RAL 7035 light grey powder coated CRCA cabinets
Automatic AC-AC Converter Bypass	Standard, will get activated when there is a fault condition
Cabinet Weather Protection Ratings	IP 20 (for use in protected indoor environments)
Display	Digital output voltage display
Mounting	4 High Quality Castor wheels | 2 with brakes
Overall Dimension (approx.)	As per Dimension Diagram of Cubical Type 660x660x720
Unpacked Weight (approx.)	165 kg
ENVIRONMENTAL	
Cooling Method	Forced air
Operating Temperature Range	0 to + 45 °C
Operating Humidity Range	10 to 90% relative humidity (non-condensing)
Note: 1. The voltage regulation is based on 415V nominal output voltage. This would proportionately change in case nominal output voltage is required to be preset at any other value between 380V-415V. 2. All standard models are optionally available in IP54.	

TECHNICAL SPECIFICATIONS - VRP-75000-9339-130M

jump to index

ELECTRICAL	
Capacity (in KVA)	75
Switching Technology	20 kHz IGBT AC chopper/inverter
Voltage Compensation Time	20 ms typical
AC INPUT	
Nominal Input Voltage (V)	Three phase 415
Designed Input Voltage Range (V) (voltage regulation accuracy of +/-1%)	360 - 470
Input Voltage Range (V) (for relaxed output regulation within functional range of 200-250V P-N)	300 - 490
Nominal Operating Frequency	47 – 63 Hz
AC Input Connector	L1, L2, L3, Neutral & Ground input wires
Overload & Short Circuit Protection	Through suitably rated input circuit breaker
AC OUTPUT	
Nominal Output Voltage (V)	Three phase 415
Efficiency	Typical 97% (under 20 – 100 % load condition)
Output Voltage Compensation Range	+/- 1 %
Maximum Rated Output Current (A)	104
System Status Indicator	Green LED ON-Normal operation | Amber LED ON-Bypass operation | Red LED ON-Fault
Output Connector	L1, L2, L3, Neutral & Ground output wires
Surge Protection	Class II Surge Protection
PHYSICAL	
Cabinet Construction	RAL 7035 light grey powder coated CRCA cabinets
Automatic AC-AC Converter Bypass	Standard, will get activated when there is a fault condition
Cabinet Weather Protection Ratings	IP 20 (for use in protected indoor environments)
Display	Digital output voltage display
Mounting	4 High Quality Castor wheels | 2 with brakes
Overall Dimension (approx.)	As per Dimension Diagram of Cubical Type 660x660x720
Unpacked Weight (approx.)	170 kg
ENVIRONMENTAL	
Cooling Method	Forced air
Operating Temperature Range	0 to + 45 °C
Operating Humidity Range	10 to 90% relative humidity (non-condensing)
Note: 1. The voltage regulation is based on 415V nominal output voltage. This would proportionately change in case nominal output voltage is required to be preset at any other value between 380V-415V. 2. All standard models are optionally available in IP54.	

TECHNICAL SPECIFICATIONS - VRP-110000-9339-130M

jump to index

ELECTRICAL	
Capacity (in KVA)	110
Switching Technology	20 kHz IGBT AC chopper/inverter
Voltage Compensation Time	20 ms typical
AC INPUT	
Nominal Input Voltage (V)	Three phase 415
Designed Input Voltage Range (V) (voltage regulation accuracy of +/-1%)	360 - 470
Input Voltage Range (V) (for relaxed output regulation within functional range of 200-250V P-N)	300 - 490
Nominal Operating Frequency	47 – 63 Hz
AC Input Connector	L1, L2, L3, Neutral & Ground input wires
Overload & Short Circuit Protection	Through suitably rated input circuit breaker
AC OUTPUT	
Nominal Output Voltage (V)	Three phase 415
Efficiency	Typical 97% (under 20 – 100 % load condition)
Output Voltage Compensation Range	+/- 1 %
Maximum Rated Output Current (A)	153
System Status Indicator	Green LED ON-Normal operation | Amber LED ON-Bypass operation | Red LED ON-Fault
Output Connector	L1, L2, L3, Neutral & Ground output wires
Surge Protection	Class II Surge Protection
PHYSICAL	
Cabinet Construction	RAL 7035 light grey powder coated CRCA cabinets
Automatic AC-AC Converter Bypass	Standard, will get activated when there is a fault condition
Cabinet Weather Protection Ratings	IP 20 (for use in protected indoor environments)
Display	Digital output voltage display
Mounting	4 High Quality Castor wheels | 2 with brakes
Overall Dimension (approx.)	As per Dimension Diagram of Cubical Type 888x888x838
Unpacked Weight (approx.)	280 kg
ENVIRONMENTAL	
Cooling Method	Forced air
Operating Temperature Range	0 to + 45 °C
Operating Humidity Range	10 to 90% relative humidity (non-condensing)
Note: 1. The voltage regulation is based on 415V nominal output voltage. This would proportionately change in case nominal output voltage is required to be preset at any other value between 380V-415V. 2. All standard models are optionally available in IP54.	

TECHNICAL SPECIFICATIONS - VRP-110000-9339-130MP

jump to index

ELECTRICAL	
Capacity (in KVA)	110
Switching Technology	20 kHz IGBT AC chopper/inverter
Voltage Compensation Time	20 ms typical
AC INPUT	
Nominal Input Voltage (V)	Three phase 415
Designed Input Voltage Range (V) (voltage regulation accuracy of +/-1%)	360 - 470
Input Voltage Range (V) (for relaxed output regulation within functional range of 200-250V P-N)	300 - 490
Nominal Operating Frequency	47 – 63 Hz
AC Input Connector	L1, L2, L3, Neutral & Ground input BUSBAR
Overload & Short Circuit Protection	Through suitably rated input circuit breaker
AC OUTPUT	
Nominal Output Voltage (V)	Three phase 415
Efficiency	Typical 97% (under 20 – 100 % load condition)
Output Voltage Compensation Range	+/- 1 %
Maximum Rated Output Current (A)	153
System Status Indicator	Green LED ON-Normal operation | Amber LED ON-Bypass operation | Red LED ON-Fault
Output Connector	L1, L2, L3, Neutral & Ground output BUSBAR
Surge Protection	Class II Surge Protection
PHYSICAL	
Cabinet Construction	RAL 7035 light grey powder coated CRCA cabinets
Automatic AC-AC Converter Bypass	Standard, will get activated when there is a fault condition
Cabinet Weather Protection Ratings	IP 20 (for use in protected indoor environments)
Display	Digital output voltage display
Mounting	Pad mounted
Overall Dimension (approx.)	As per Dimension Diagram of Panel Type 650x1220x2400
Unpacked Weight (approx.)	470 kg
ENVIRONMENTAL	
Cooling Method	Forced air
Operating Temperature Range	0 to + 45 °C
Operating Humidity Range	10 to 90% relative humidity (non-condensing)
Note: 1. The voltage regulation is based on 415V nominal output voltage. This would proportionately change in case nominal output voltage is required to be preset at any other value between 380V-415V. 2. All standard models are optionally available in IP54.	

TECHNICAL SPECIFICATIONS - VRP-130000-9339-130M

jump to index

ELECTRICAL	
Capacity (in KVA)	130
Switching Technology	20 kHz IGBT AC chopper/inverter
Voltage Compensation Time	20 ms typical
AC INPUT	
Nominal Input Voltage (V)	Three phase 415
Designed Input Voltage Range (V) (voltage regulation accuracy of +/-1%)	360 - 470
Input Voltage Range (V) (for relaxed output regulation within functional range of 200-250V P-N)	300 - 490
Nominal Operating Frequency	47 – 63 Hz
AC Input Connector	L1, L2, L3, Neutral & Ground input wires
Overload & Short Circuit Protection	Through suitably rated input circuit breaker
AC OUTPUT	
Nominal Output Voltage (V)	Three phase 415
Efficiency	Typical 97% (under 20 – 100 % load condition)
Output Voltage Compensation Range	+/- 1 %
Maximum Rated Output Current (A)	181
System Status Indicator	Green LED ON-Normal operation | Amber LED ON-Bypass operation | Red LED ON-Fault
Output Connector	L1, L2, L3, Neutral & Ground output wires
Surge Protection	Class II Surge Protection
PHYSICAL	
Cabinet Construction	RAL 7035 light grey powder coated CRCA cabinets
Automatic AC-AC Converter Bypass	Standard, will get activated when there is a fault condition
Cabinet Weather Protection Ratings	IP 20 (for use in protected indoor environments)
Display	Digital output voltage display
Mounting	4 High Quality Castor wheels | 2 with brakes
Overall Dimension (approx.)	As per Dimension Diagram of Cubical Type 888x888x838
Unpacked Weight (approx.)	320 kg
ENVIRONMENTAL	
Cooling Method	Forced air
Operating Temperature Range	0 to + 45 °C
Operating Humidity Range	10 to 90% relative humidity (non-condensing)
Note: 1. The voltage regulation is based on 415V nominal output voltage. This would proportionately change in case nominal output voltage is required to be preset at any other value between 380V-415V. 2. All standard models are optionally available in IP54.	

TECHNICAL SPECIFICATIONS - VRP-130000-9339-130MP

jump to index

ELECTRICAL	
Capacity (in KVA)	130
Switching Technology	20 kHz IGBT AC chopper/inverter
Voltage Compensation Time	20 ms typical
AC INPUT	
Nominal Input Voltage (V)	Three phase 415
Designed Input Voltage Range (V) (voltage regulation accuracy of +/-1%)	360 - 470
Input Voltage Range (V) (for relaxed output regulation within functional range of 200-250V P-N)	300 - 490
Nominal Operating Frequency	47 – 63 Hz
AC Input Connector	L1, L2, L3, Neutral & Ground input BUSBAR
Overload & Short Circuit Protection	Through suitably rated input circuit breaker
AC OUTPUT	
Nominal Output Voltage (V)	Three phase 415
Efficiency	Typical 97% (under 20 – 100 % load condition)
Output Voltage Compensation Range	+/- 1 %
Maximum Rated Output Current (A)	181
System Status Indicator	Green LED ON-Normal operation | Amber LED ON-Bypass operation | Red LED ON-Fault
Output Connector	L1, L2, L3, Neutral & Ground output BUSBAR
Surge Protection	Class II Surge Protection
PHYSICAL	
Cabinet Construction	RAL 7035 light grey powder coated CRCA cabinets
Automatic AC-AC Converter Bypass	Standard, will get activated when there is a fault condition
Cabinet Weather Protection Ratings	IP 20 (for use in protected indoor environments)
Display	Digital output voltage display
Mounting	Pad mounted
Overall Dimension (approx.)	As per Dimension Diagram of Panel Type 650x1220x2400
Unpacked Weight (approx.)	490 kg
ENVIRONMENTAL	
Cooling Method	Forced air
Operating Temperature Range	0 to + 45 °C
Operating Humidity Range	10 to 90% relative humidity (non-condensing)
Note: 1. The voltage regulation is based on 415V nominal output voltage. This would proportionately change in case nominal output voltage is required to be preset at any other value between 380V-415V. 2. All standard models are optionally available in IP54.	

TECHNICAL SPECIFICATIONS - VRP-160000-9339-130M

jump to index

ELECTRICAL	
Capacity (in KVA)	160
Switching Technology	20 kHz IGBT AC chopper/inverter
Voltage Compensation Time	20 ms typical
AC INPUT	
Nominal Input Voltage (V)	Three phase 415
Designed Input Voltage Range (V) (voltage regulation accuracy of +/-1%)	360 - 470
Input Voltage Range (V) (for relaxed output regulation within functional range of 200-250V P-N)	300 - 490
Nominal Operating Frequency	47 – 63 Hz
AC Input Connector	L1, L2, L3, Neutral & Ground input wires
Overload & Short Circuit Protection	Through suitably rated input circuit breaker
AC OUTPUT	
Nominal Output Voltage (V)	Three phase 415
Efficiency	Typical 97% (under 20 – 100 % load condition)
Output Voltage Compensation Range	+/- 1 %
Maximum Rated Output Current (A)	223
System Status Indicator	Green LED ON-Normal operation | Amber LED ON-Bypass operation | Red LED ON-Fault
Output Connector	L1, L2, L3, Neutral & Ground output wires
Surge Protection	Class II Surge Protection
PHYSICAL	
Cabinet Construction	RAL 7035 light grey powder coated CRCA cabinets
Automatic AC-AC Converter Bypass	Standard, will get activated when there is a fault condition
Cabinet Weather Protection Ratings	IP 20 (for use in protected indoor environments)
Display	Digital output voltage display
Mounting	4 High Quality Castor wheels | 2 with brakes
Overall Dimension (approx.)	As per Dimension Diagram of Cubical Type 888x888x838
Unpacked Weight (approx.)	355 kg
ENVIRONMENTAL	
Cooling Method	Forced air
Operating Temperature Range	0 to + 45 °C
Operating Humidity Range	10 to 90% relative humidity (non-condensing)
Note: 1. The voltage regulation is based on 415V nominal output voltage. This would proportionately change in case nominal output voltage is required to be preset at any other value between 380V-415V. 2. All standard models are optionally available in IP54.	

TECHNICAL SPECIFICATIONS - VRP-160000-9339-130MP

jump to index

ELECTRICAL	
Capacity (in KVA)	160
Switching Technology	20 kHz IGBT AC chopper/inverter
Voltage Compensation Time	20 ms typical
AC INPUT	
Nominal Input Voltage (V)	Three phase 415
Designed Input Voltage Range (V) (voltage regulation accuracy of +/-1%)	360 - 470
Input Voltage Range (V) (for relaxed output regulation within functional range of 200-250V P-N)	300 - 490
Nominal Operating Frequency	47 – 63 Hz
AC Input Connector	L1, L2, L3, Neutral & Ground input BUSBAR
Overload & Short Circuit Protection	Through suitably rated input circuit breaker
AC OUTPUT	
Nominal Output Voltage (V)	Three phase 415
Efficiency	Typical 97% (under 20 – 100 % load condition)
Output Voltage Compensation Range	+/- 1 %
Maximum Rated Output Current (A)	223
System Status Indicator	Green LED ON-Normal operation | Amber LED ON-Bypass operation | Red LED ON-Fault
Output Connector	L1, L2, L3, Neutral & Ground output BUSBAR
Surge Protection	Class II Surge Protection
PHYSICAL	
Cabinet Construction	RAL 7035 light grey powder coated CRCA cabinets
Automatic AC-AC Converter Bypass	Standard, will get activated when there is a fault condition
Cabinet Weather Protection Ratings	IP 20 (for use in protected indoor environments)
Display	Digital output voltage display
Mounting	Pad mounted
Overall Dimension (approx.)	As per Dimension Diagram of Panel Type 650x1220x2400
Unpacked Weight (approx.)	540 kg
ENVIRONMENTAL	
Cooling Method	Forced air
Operating Temperature Range	0 to + 45 °C
Operating Humidity Range	10 to 90% relative humidity (non-condensing)
Note: 1. The voltage regulation is based on 415V nominal output voltage. This would proportionately change in case nominal output voltage is required to be preset at any other value between 380V-415V. 2. All standard models are optionally available in IP54.	

TECHNICAL SPECIFICATIONS - VRP-200000-9339-130MP

jump to index

ELECTRICAL	
Capacity (in KVA)	200
Switching Technology	20 kHz IGBT AC chopper/inverter
Voltage Compensation Time	20 ms typical
AC INPUT	
Nominal Input Voltage (V)	Three phase 415
Designed Input Voltage Range (V) (voltage regulation accuracy of +/-1%)	360 - 470
Input Voltage Range (V) (for relaxed output regulation within functional range of 200-250V P-N)	300 - 490
Nominal Operating Frequency	47 – 63 Hz
AC Input Connector	L1, L2, L3, Neutral & Ground input BUSBAR
Overload & Short Circuit Protection	Through suitably rated input circuit breaker
AC OUTPUT	
Nominal Output Voltage (V)	Three phase 415
Efficiency	Typical 97% (under 20 – 100 % load condition)
Output Voltage Compensation Range	+/- 1 %
Maximum Rated Output Current (A)	278
System Status Indicator	Green LED ON-Normal operation | Amber LED ON-Bypass operation | Red LED ON-Fault
Output Connector	L1, L2, L3, Neutral & Ground output BUSBAR
Surge Protection	Class II Surge Protection
PHYSICAL	
Cabinet Construction	RAL 7035 light grey powder coated CRCA cabinets
Automatic AC-AC Converter Bypass	Standard, will get activated when there is a fault condition
Cabinet Weather Protection Ratings	IP 20 (for use in protected indoor environments)
Display	Digital output voltage display
Mounting	Pad mounted
Overall Dimension (approx.)	As per Dimension Diagram of Panel Type 650x1220x2400
Unpacked Weight (approx.)	670 kg
ENVIRONMENTAL	
Cooling Method	Forced air
Operating Temperature Range	0 to + 45 °C
Operating Humidity Range	10 to 90% relative humidity (non-condensing)
Note: 1. The voltage regulation is based on 415V nominal output voltage. This would proportionately change in case nominal output voltage is required to be preset at any other value between 380V-415V. 2. All standard models are optionally available in IP54.	

TECHNICAL SPECIFICATIONS - VRP-250000-9339-130MP

jump to index

ELECTRICAL	
Capacity (in KVA)	250
Switching Technology	20 kHz IGBT AC chopper/inverter
Voltage Compensation Time	20 ms typical
AC INPUT	
Nominal Input Voltage (V)	Three phase 415
Designed Input Voltage Range (V) (voltage regulation accuracy of +/-1%)	360 - 470
Input Voltage Range (V) (for relaxed output regulation within functional range of 200-250V P-N)	300 - 490
Nominal Operating Frequency	47 – 63 Hz
AC Input Connector	L1, L2, L3, Neutral & Ground input BUSBAR
Overload & Short Circuit Protection	Through suitably rated input circuit breaker
AC OUTPUT	
Nominal Output Voltage (V)	Three phase 415
Efficiency	Typical 97% (under 20 – 100 % load condition)
Output Voltage Compensation Range	+/- 1 %
Maximum Rated Output Current (A)	348
System Status Indicator	Green LED ON-Normal operation | Amber LED ON-Bypass operation | Red LED ON-Fault
Output Connector	L1, L2, L3, Neutral & Ground output BUSBAR
Surge Protection	Class II Surge Protection
PHYSICAL	
Cabinet Construction	RAL 7035 light grey powder coated CRCA cabinets
Automatic AC-AC Converter Bypass	Standard, will get activated when there is a fault condition
Cabinet Weather Protection Ratings	IP 20 (for use in protected indoor environments)
Display	Digital output voltage display
Mounting	Pad mounted
Overall Dimension (approx.)	As per Dimension Diagram of Panel Type 650x1220x2400
Unpacked Weight (approx.)	670 kg
ENVIRONMENTAL	
Cooling Method	Forced air
Operating Temperature Range	0 to + 45 °C
Operating Humidity Range	10 to 90% relative humidity (non-condensing)
Note: 1. The voltage regulation is based on 415V nominal output voltage. This would proportionately change in case nominal output voltage is required to be preset at any other value between 380V-415V. 2. All standard models are optionally available in IP54.	

TECHNICAL SPECIFICATIONS - VRP-300000-9339-130MP

jump to index

ELECTRICAL	
Capacity (in KVA)	300
Switching Technology	20 kHz IGBT AC chopper/inverter
Voltage Compensation Time	20 ms typical
AC INPUT	
Nominal Input Voltage (V)	Three phase 415
Designed Input Voltage Range (V) (voltage regulation accuracy of +/-1%)	360 - 470
Input Voltage Range (V) (for relaxed output regulation within functional range of 200-250V P-N)	300 - 490
Nominal Operating Frequency	47 – 63 Hz
AC Input Connector	L1, L2, L3, Neutral & Ground input BUSBAR
Overload & Short Circuit Protection	Through suitably rated input circuit breaker
AC OUTPUT	
Nominal Output Voltage (V)	Three phase 415
Efficiency	Typical 97% (under 20 – 100 % load condition)
Output Voltage Compensation Range	+/- 1 %
Maximum Rated Output Current (A)	417
System Status Indicator	Green LED ON-Normal operation | Amber LED ON-Bypass operation | Red LED ON-Fault
Output Connector	L1, L2, L3, Neutral & Ground output BUSBAR
Surge Protection	Class II Surge Protection
PHYSICAL	
Cabinet Construction	RAL 7035 light grey powder coated CRCA cabinets
Automatic AC-AC Converter Bypass	Standard, will get activated when there is a fault condition
Cabinet Weather Protection Ratings	IP 20 (for use in protected indoor environments)
Display	Digital output voltage display
Mounting	Pad mounted
Overall Dimension (approx.)	As per Dimension Diagram of Panel Type 650x1220x2400
Unpacked Weight (approx.)	755 kg
ENVIRONMENTAL	
Cooling Method	Forced air
Operating Temperature Range	0 to + 45 °C
Operating Humidity Range	10 to 90% relative humidity (non-condensing)
Note: 1. The voltage regulation is based on 415V nominal output voltage. This would proportionately change in case nominal output voltage is required to be preset at any other value between 380V-415V. 2. All standard models are optionally available in IP54.	

TECHNICAL SPECIFICATIONS - VRP-400000-9339-130MP

jump to index

ELECTRICAL	
Capacity (in KVA)	400
Switching Technology	20 kHz IGBT AC chopper/inverter
Voltage Compensation Time	20 ms typical
AC INPUT	
Nominal Input Voltage (V)	Three phase 415
Designed Input Voltage Range (V) (voltage regulation accuracy of +/-1%)	360 - 470
Input Voltage Range (V) (for relaxed output regulation within functional range of 200-250V P-N)	300 - 490
Nominal Operating Frequency	47 – 63 Hz
AC Input Connector	L1, L2, L3, Neutral & Ground input BUSBAR
Overload & Short Circuit Protection	Through suitably rated input circuit breaker
AC OUTPUT	
Nominal Output Voltage (V)	Three phase 415
Efficiency	Typical 97% (under 20 – 100 % load condition)
Output Voltage Compensation Range	+/- 1 %
Maximum Rated Output Current (A)	556
System Status Indicator	Green LED ON-Normal operation | Amber LED ON-Bypass operation | Red LED ON-Fault
Output Connector	L1, L2, L3, Neutral & Ground output BUSBAR
Surge Protection	Class II Surge Protection
PHYSICAL	
Cabinet Construction	RAL 7035 light grey powder coated CRCA cabinets
Automatic AC-AC Converter Bypass	Standard, will get activated when there is a fault condition
Cabinet Weather Protection Ratings	IP 20 (for use in protected indoor environments)
Display	Digital output voltage display
Mounting	Pad mounted
Overall Dimension (approx.)	As per Dimension Diagram of Panel Type 650x2020x2400
Unpacked Weight (approx.)	1050 kg
ENVIRONMENTAL	
Cooling Method	Forced air
Operating Temperature Range	0 to + 45 °C
Operating Humidity Range	10 to 90% relative humidity (non-condensing)
Note: 1. The voltage regulation is based on 415V nominal output voltage. This would proportionately change in case nominal output voltage is required to be preset at any other value between 380V-415V. 2. All standard models are optionally available in IP54.	

TECHNICAL SPECIFICATIONS - VRP-416000-9339-130MP

jump to index

ELECTRICAL	
Capacity (in KVA)	416
Switching Technology	20 kHz IGBT AC chopper/inverter
Voltage Compensation Time	20 ms typical
AC INPUT	
Nominal Input Voltage (V)	Three phase 415
Designed Input Voltage Range (V) (voltage regulation accuracy of +/-1%)	360 - 470
Input Voltage Range (V) (for relaxed output regulation within functional range of 200-250V P-N)	300 - 490
Nominal Operating Frequency	47 – 63 Hz
AC Input Connector	L1, L2, L3, Neutral & Ground input BUSBAR
Overload & Short Circuit Protection	Through suitably rated input circuit breaker
AC OUTPUT	
Nominal Output Voltage (V)	Three phase 415
Efficiency	Typical 97% (under 20 – 100 % load condition)
Output Voltage Compensation Range	+/- 1 %
Maximum Rated Output Current (A)	579
System Status Indicator	Green LED ON-Normal operation | Amber LED ON-Bypass operation | Red LED ON-Fault
Output Connector	L1, L2, L3, Neutral & Ground output BUSBAR
Surge Protection	Class II Surge Protection
PHYSICAL	
Cabinet Construction	RAL 7035 light grey powder coated CRCA cabinets
Automatic AC-AC Converter Bypass	Standard, will get activated when there is a fault condition
Cabinet Weather Protection Ratings	IP 20 (for use in protected indoor environments)
Display	Digital output voltage display
Mounting	Pad mounted
Overall Dimension (approx.)	As per Dimension Diagram of Panel Type 650x2020x2400
Unpacked Weight (approx.)	1060 kg
ENVIRONMENTAL	
Cooling Method	Forced air
Operating Temperature Range	0 to + 45 °C
Operating Humidity Range	10 to 90% relative humidity (non-condensing)
Note: 1. The voltage regulation is based on 415V nominal output voltage. This would proportionately change in case nominal output voltage is required to be preset at any other value between 380V-415V. 2. All standard models are optionally available in IP54.	

TECHNICAL SPECIFICATIONS - VRP-450000-9339-130MP

jump to index

ELECTRICAL	
Capacity (in KVA)	450
Switching Technology	20 kHz IGBT AC chopper/inverter
Voltage Compensation Time	20 ms typical
AC INPUT	
Nominal Input Voltage (V)	Three phase 415
Designed Input Voltage Range (V) (voltage regulation accuracy of +/-1%)	360 - 470
Input Voltage Range (V) (for relaxed output regulation within functional range of 200-250V P-N)	300 - 490
Nominal Operating Frequency	47 – 63 Hz
AC Input Connector	L1, L2, L3, Neutral & Ground input BUSBAR
Overload & Short Circuit Protection	Through suitably rated input circuit breaker
AC OUTPUT	
Nominal Output Voltage (V)	Three phase 415
Efficiency	Typical 97% (under 20 – 100 % load condition)
Output Voltage Compensation Range	+/- 1 %
Maximum Rated Output Current (A)	626
System Status Indicator	Green LED ON-Normal operation | Amber LED ON-Bypass operation | Red LED ON-Fault
Output Connector	L1, L2, L3, Neutral & Ground output BUSBAR
Surge Protection	Class II Surge Protection
PHYSICAL	
Cabinet Construction	RAL 7035 light grey powder coated CRCA cabinets
Automatic AC-AC Converter Bypass	Standard, will get activated when there is a fault condition
Cabinet Weather Protection Ratings	IP 20 (for use in protected indoor environments)
Display	Digital output voltage display
Mounting	Pad mounted
Overall Dimension (approx.)	As per Dimension Diagram of Panel Type 850x2020x2400
Unpacked Weight (approx.)	1100 kg
ENVIRONMENTAL	
Cooling Method	Forced air
Operating Temperature Range	0 to + 45 °C
Operating Humidity Range	10 to 90% relative humidity (non-condensing)
Note: 1. The voltage regulation is based on 415V nominal output voltage. This would proportionately change in case nominal output voltage is required to be preset at any other value between 380V-415V. 2. All standard models are optionally available in IP54.	

CUBICAL TYPE | 610 x 610 x 640 (in mm)

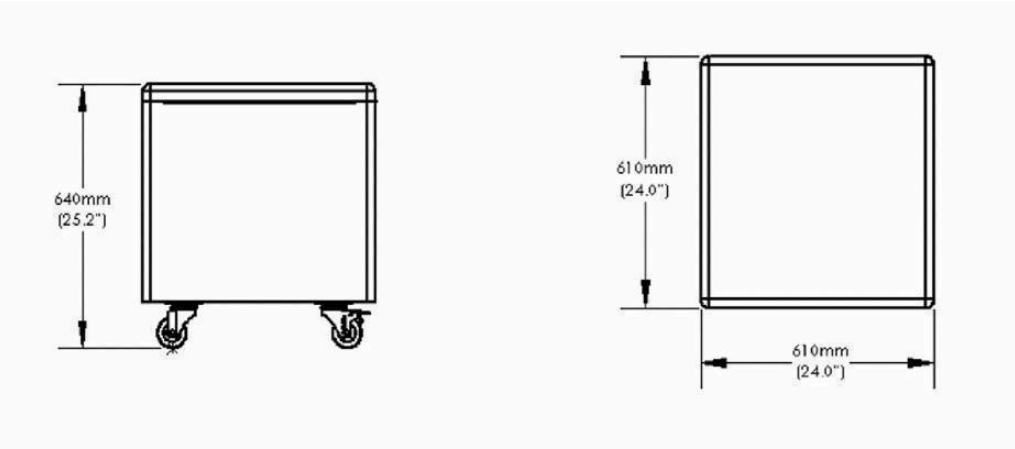

CUBICAL TYPE | 660 x 660 x 720 (in mm)

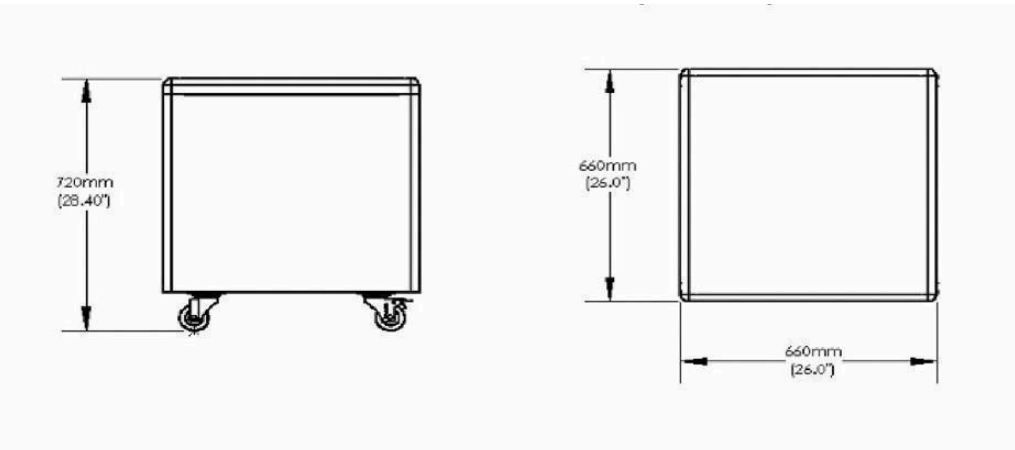

CUBICAL TYPE | 888 x 888 x 838 (in mm)

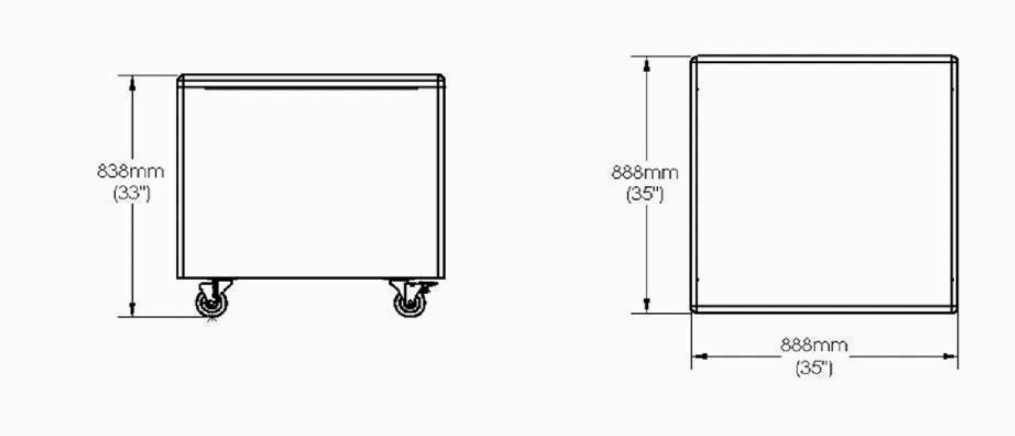

jump to index

PANEL TYPE | 650 x 1220 x 2400 (in mm)

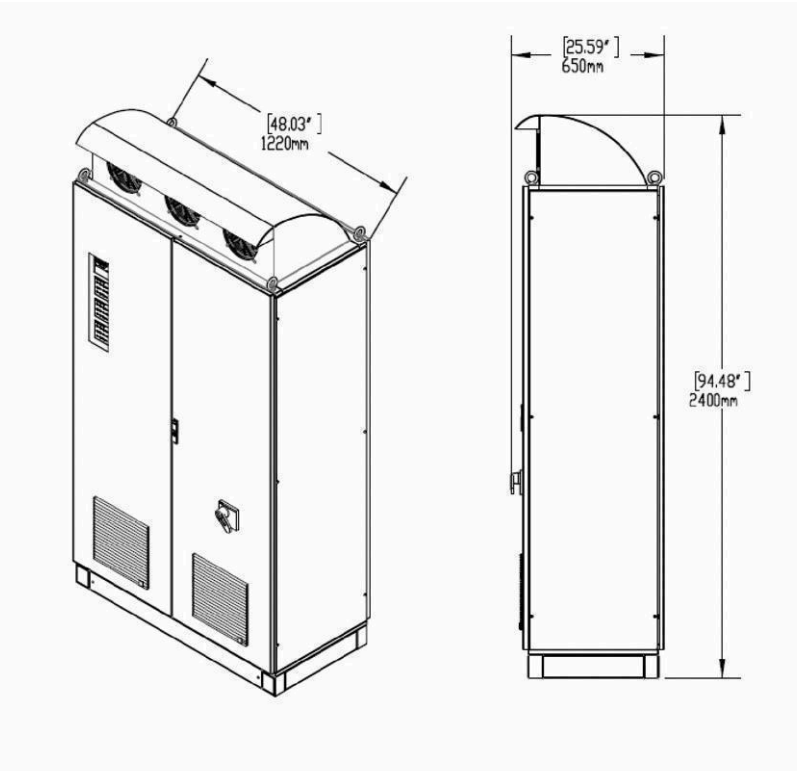

PANEL TYPE | 650 x 2020x 2400 (in mm)

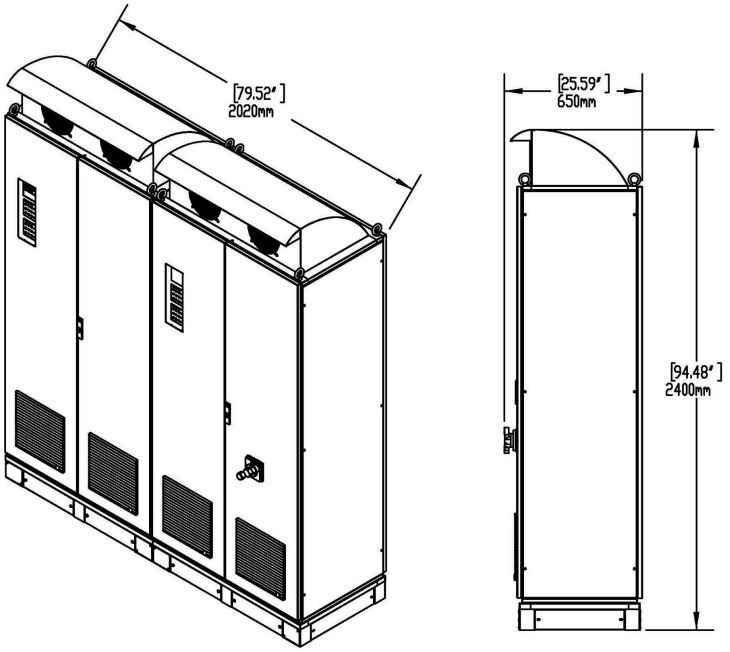

jump to index

PANEL TYPE | 850 x 2020x 2400 (in mm)

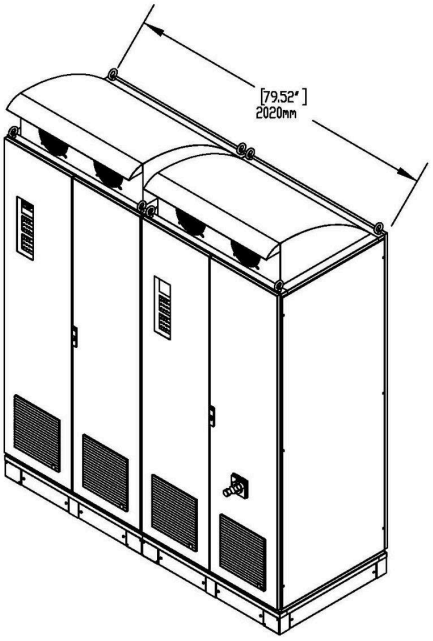

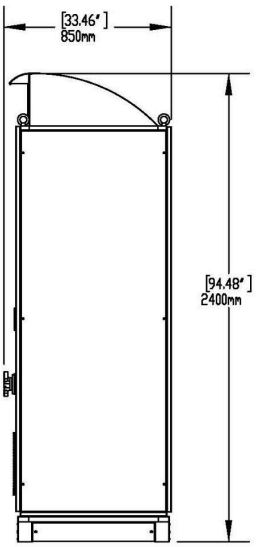

Contact Us

jump to index

Contact us for a **free demo trial** or a **customised quote** or just a hello!

🎧+91-8000455999 | 📞+91-7567722666 | ✉️info@tsipower.in

📍TSi Power Pvt Ltd, 154-155, Siddhi Industrial Infra Park, Waghodia, Vadodara, Gujarat 391760, India | 🌐www.tsipower.in